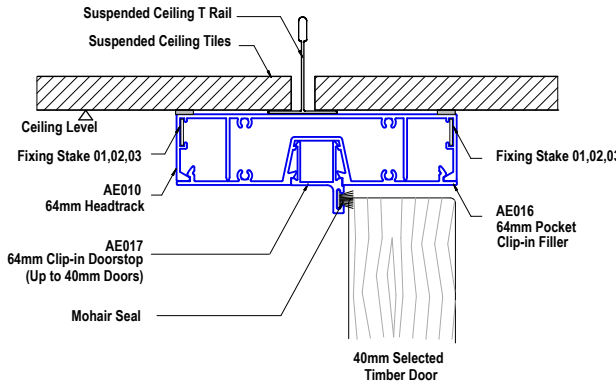
Suspended Ceiling T Rail
Suspended Ceiling Tiles
Ceiling Level
Fixing Stake 01,02,03
AE010
64mm Headtrack
AE017
64mm Clip-in Doorstop
(Up to 40mm Doors)
Mohair Seal
Fixing Stake 01,02,03
AE016
64mm Pocket
Clip-in Filler
40mm Selected
Timber Door

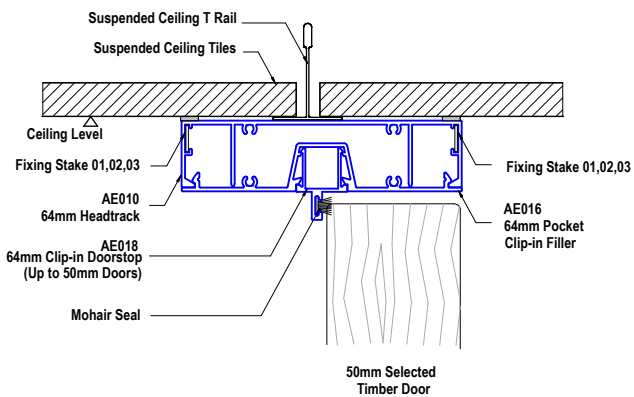
Suspended Ceiling T Rail
Suspended Ceiling Tiles
Ceiling Level
Fixing Stake 01,02,03
AE010
64mm Headtrack
AE018
64mm Clip-in Doorstop
(Up to 50mm Doors)
Mohair Seal
Fixing Stake 01,02,03
AE016
64mm Pocket
Clip-in Filler
50mm Selected
Timber Door